DRC

PT. DIAN RAYA CIPTA

CHECKSHEET INSPECTION RESULT

Approved	Checked	Prepared
Siswanta	Jefri	Dede R

No. Doc.	:	FM-QC-003
Date Created	:	12-03-24
Effective Date	:	12-03-24
Rev. No	:	0

Customer	:	PT. DIID	
Part Name	:	Shield Plate (1)	
Part No	:	3P519607-2 A	Type :BMS
Material	:	SGCC-Z18	Surf. Treatment :
No. lot	:		Qty Delv :
Status Part	:	☐ New Part (Sample	☐ Reguler Part
		☐ Process Change	☐ Special Approval
		☐ Initial Part For Masspro	☐ ……

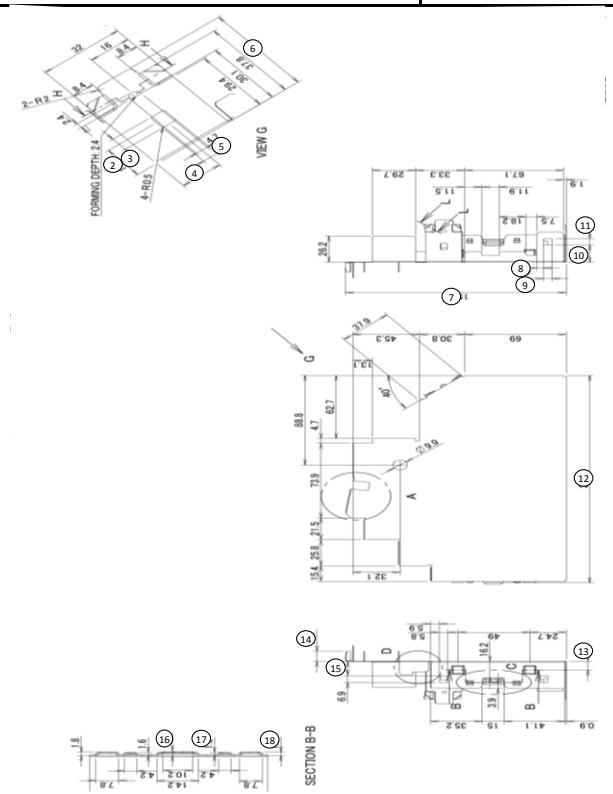

No.	Inspection Item	Standard Value Nominal	Standard Value Tolerance	Inspection Instrument	DRC date : 1	2	3	4	5	Judge	DIID date : 1	2	3	Judge
	A. DIMENSION													
1	Thickness	0,4	±0.04	Dig. Caliper										
2	Distance	15,6	±0.5	Dig. Caliper										
3	Distance	6,5	±0.15	Dig. Caliper										
4	Distance	16,0	±0.5	Dig. Caliper										
5	Distance	6,0	±0.15	Dig. Caliper										
6	Distance	42,0	±0.5	Heigh Gauge										
7	Distance	150,1	±1.0	Heigh Gauge										
8	Distance	4,4	±0.5	Heigh Gauge										
9	Distance	6,0	±0.15	Dig. Caliper										
10	Distance	17,0	±0.5	Dig. Caliper										
11	Distance	6,5	±0.15	Dig. Caliper										
12	Distance	205,5	±1.0	Heigh Gauge										
13	Distance	8,8	±0.5	Dig. Caliper										
14	Distance	10,1	±0.5	Dig. Caliper										
	Distance △1	10,1	±0.5	Dig. Caliper										
15	Distance	14,0	±0.3	Dig. Caliper										
16	Distance	2,1	±0.5	Dig. Caliper										
17	Distance	1,6	±0.5	Dig. Caliper										
18	Distance	1,8	±0.5	Dig. Caliper										
	B. APPEARANCE													
1	All Appearance	No. Burr, No Dirty, No Oil, No Rust, No Dent, No Scratch, No Deform		Visual										

Note :

								OK		**NG**		**OK**	**NG**
	Revision	Date	Prepared Name	Prepared Sign	Checked Name	Checked Sign	Approved Name	Approved Sign	APPROVED	CHECKED	PREPARED	CHECKED	PREPARED
△1	Add point request PT. DIID	25-06-26	Desita		Indah		Jefri						