DRC

PT. DIAN RAYA CIPTA

CHECKSHEET INSPECTION RESULT

Approved	Checked	Prepared
Siswanta	Jefri	Dede R

No. Doc.	:	FM-QC-003
Date Created	:	12-03-24
Effective Date	:	12-03-24
Rev. No	:	0

Customer	:	PT. DIID	
Part Name	:	Stop Valve Mounting Plate (Metal)	
Part No	:	2P574725-2 A	Type :BMS(OD)
Material	:	SGCD1-ZN22	Surf. Treatment :
No. lot	:		Qty Delv :
Status Part	:	☐ New Part (Sample	☐ Reguler Part
		☐ Process Change	☐ Special Approval
		☐ Initial Part For Masspro	☐ ……

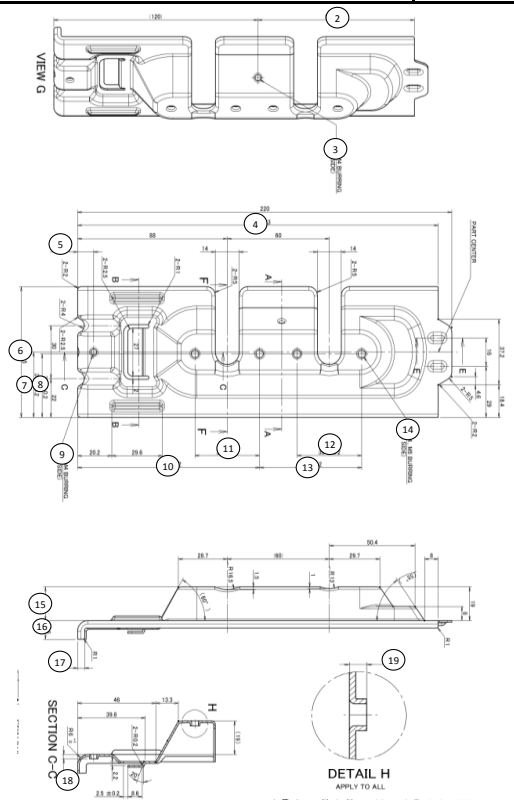

No.	Inspection Item	Standard Value Nominal	Standard Value Tolerance	Inspection Instrument	DRC date : 1	2	3	4	5	Judge	DIID date : 1	2	3	Judge
	A. DIMENSION													
1	Thickness	1.0	±0.06	Dig. Caliper										
2	Distance	92.0	±0.2	Faro Arm										
3	Burring	Ø3.5	±0,05	Dig. Caliper										
4	Distance	212.0	±0.3	Height Gauge										
5	Distance	9.5	±0.3	Dig. Caliper										
6	Distance	74.0	±0.5	Dig. Caliper										
7	Distance	37.0	±0.2	Dig. Caliper										
8	Distance	36.0	±0.2	Height Gauge										
9	Burring	Ø3.5	±0,05	Dig. Caliper										
10	Distance	107.0	±0.2	Height Gauge										
11	Distance	38.0	±0.2	Height Gauge										
12	Distance	38.0	±0.2	Height Gauge										
13	Distance	60.0	±0.2	Height Gauge										
14	4-Burring	Ø4.4	±0,05	Dig. Caliper										
		Ø4.4	±0,05	Dig. Caliper										
		Ø4.4	±0,05	Dig. Caliper										
		Ø4.4	±0,05	Dig. Caliper										
15	Distance	19.0	±0.5	Height Gauge										
16	Distance	10.6	±0.5	Height Gauge										
17	Distance	4.2	±0.5	Dig. Caliper										
18	Distance	Min 2.4		Dig. Caliper										
19	Distance	Min 2.8		Dig. Caliper										
	B. APPEARANCE													
1	All Appearance	No. Burr, No Dirty, No Oil, No Rust, No Dent, No Scratch, No Deform		Visual										

Note :

								OK		**NG**	**OK**	**NG**
	Revision	Date	Prepared		Checked		Approved		APPROVED	CHECKED	PREPARED	CHECKED	PREPARED
			Name	Sign	Name	Sign	Name	Sign					
									Jefri				