DRC PT. DIAN RAYA CIPTA	CHECKSHEET INSPECTION RESULT	Approved	Checked	Prepared	No. Doc. : FM-QC-003
		Siswanta	Jefri	Dede R	Date Created : 12-03-24
					Effective Date : 12-03-24
					Rev. No : 0

Customer	: PT. DIID		
Part Name	: Partition Plate (Sheet Metal)		
Part No	: 3P773767-1	Type	: BMS (OD)
Material	: SGCD1-ZN22	Surf. Treatment	:
No. lot	:	Qty Delv	:
Status Part	: ☐ New Part (Sample	☐ Reguler Part	
	☐ Process Change	☐ Special Approval	
	☐ Initial Part For Masspro	☐ ……	

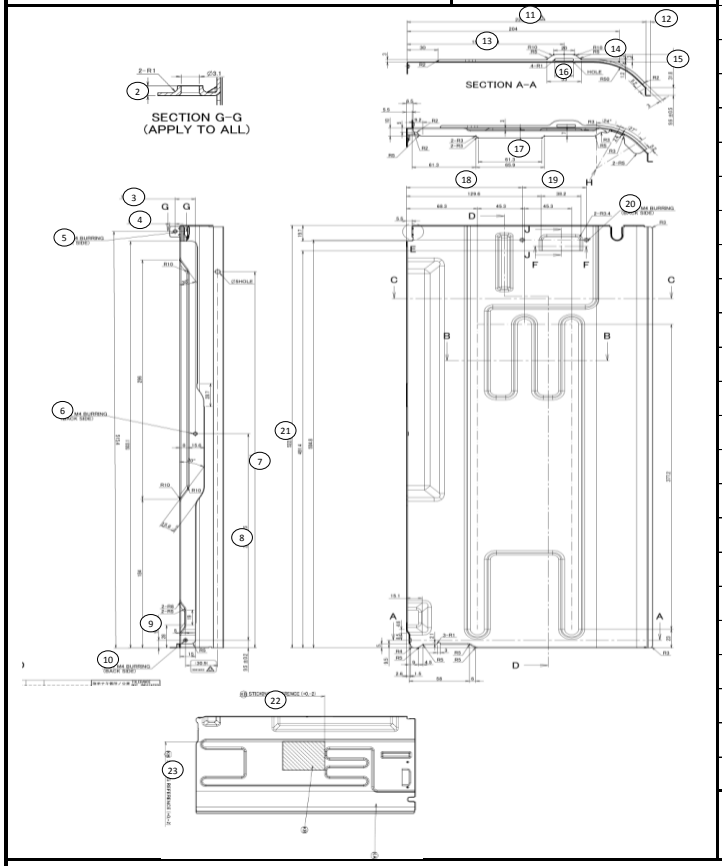

No.	Inspection Item	Standard Value		Inspection Instrument	DRC date :						DIID date :			
		Nominal	Tolerance		1	2	3	4	5	Judge	1	2	3	Judge
	A. DIMENSION													
1	Thickness	0.6	±0.06	Dig. Caliper										
2	Distance	MIN 2.0		Dig. Caliper										
3	Width	19.3	±0.2	Heigh Gauge										
4	Width	5.4	±0.2	Heigh Gauge										
5	Burring	Ø3.1	±0.05	Pin Gauge										
6	Burring	Ø3.1	±0.05	Pin Gauge										
7	Distance	465.5	±1	Faro Arm										
8	Width	255.5	±0.5	Faro Arm										
9	Width	9.5	±0.2	Heigh Gauge										
10	Burring	Ø3.1	±0.05	Pin Gauge										
11	Distance	229.5	+2.2/-0	Faro Arm										
12	Distance	4.5	±0.5	Heigh Gauge										
13	Distance	150.9	±0.4	Heigh Gauge										
14	Hole	3.0	±0,15	Dig. Caliper										
15	Distance	9.5	±0,5	Dig. Caliper										
16	Distance	18.0	±0,3	Dig. Caliper										
17	Distance	9.3	±0,5	Dig. Caliper										
18	Distance	111.4	±0,5	Heigh Gauge										
19	Distance	61.6	±0,5	Heigh Gauge										
20	Burring	Ø3.1	±0.05	Pin Gauge										
21	Distance	522.8	±0.5	Faro Arm										
22	Sticking Reference	0.0	0/-2	Ruler										
23	Sticking Reference	0.0	0/-2	Ruler										
	B. APPEARANCE													
1	All Appearance	No. Burr, No Dirty, No Oil, No Rust, No Dent, No Scratch, No Deform		Visual										

Note :

OK	NG	OK	NG

	Revision	Date	Prepared		Checked		Approved		APPROVED	CHECKED	PREPARED	CHECKED	PREPARED
			Name	Sign	Name	Sign	Name	Sign					
									Jefri				