DRC

PT. DIAN RAYA CIPTA

INSPECTION RESULT

APPROVED	CHECKED	PREPARED			
			No. Doc.	:	FM-QC-003
			Date Created	:	15/05/25
			Effective Date	:	20/05/25
Chaidir	Jefri	E. Musadad	Rev. No	:	0

Customer	:	PT. DIID			
Part Name	:	Partition Plate (Sheet Metal)			
Part No	:	1P745271	Type	:	SF 2
Material	:	SGCD2-ZN22	Surf. Treatment	:	
No. lot	:		Qty Delv	:	
Status Part	:	☐ New Part (Sample	☐ Reguler Part		
		☐ Process Change	☐ Special Approval		
		☐ Initial Part For Masspro	☐ ……		

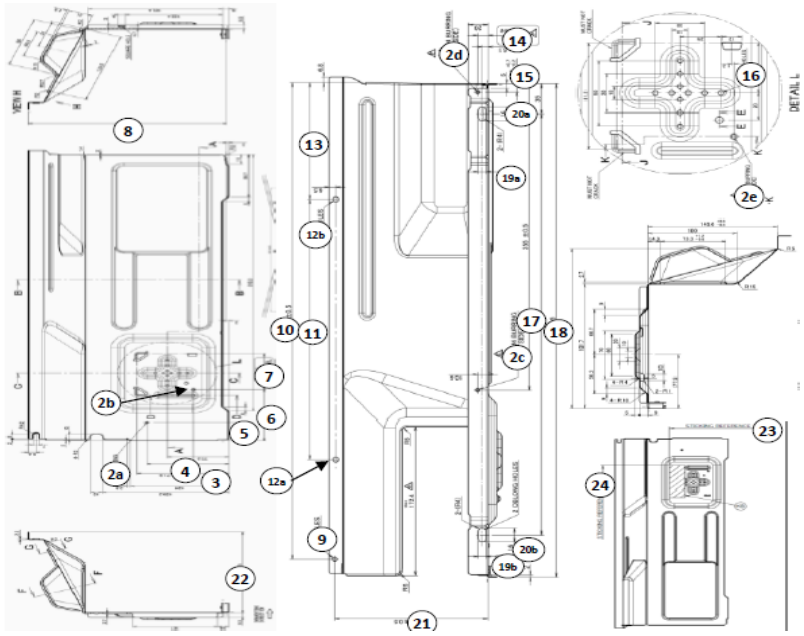

No.	Inspection Item	Standard Value		Inspection Instrument	DRC date :						DIID date :			
		Nominal	Tolerance		1	2	3	4	5	Judge	1	2	3	Judge
	A. DIMENSION													
1	Thickness	0,7	± 0.06	Dig. Caliper										
2a	Burring	Ø3.2	±0.05	Pin Guage										
2b	Burring	Ø3.2	±0.05	Pin Guage										
2c	Burring	Ø3.2	±0.05	Pin Guage										
2d	Burring	Ø3.2	±0.05	Pin Guage										
2e	Burring	Ø3.2	±0.05	Pin Guage										
3	Distance	44.7	±0.5	Faro Arm										
4	Distance	103.1	±0.5	Faro Arm										
5	Distance	36,5	±0.5	Faro Arm										
6	Distance	101,7	±0.5	Faro Arm										
7	Distance	71,5	+0/-0.4	Faro Arm										
8	Distance	249,8	±0.5	Faro Arm										
9	Hole	Ø5	±0.15	Dig. Caliper										
10	Distance	550,8	±0.5	Faro Arm										
11	Distance	300,0	±0.5	Faro Arm										
12a	Distance	Ø6	±0.15	Dig. Caliper										
12b	2 - Distance	Ø6	±0.15	Dig. Caliper										
13	2 - Distance	6,5	±0.5	Dig. Caliper										
14	Distance	10,6	+0.1/-0.3	Faro Arm										
15	Distance	9,5	+0.7/-0.2	Faro Arm										
16	Distance	Ø 3,5	±0.05	Pin Guage										
	Distance	Ø 3,5	±0.05	Pin Guage										
	Distance	Ø 3,5	±0.05	Pin Guage										
	Distance	Ø 3,5	±0.05	Pin Guage										
	11-Hole	Ø3.5	±0.05	Pin Guage										

OK	NG	OK	NG
APPROVED	CHECKED	PREPARED	CHECKED	PREPARED

Revision		Date	Prepared		Checked		Approved	

DRC

PT. DIAN RAYA CIPTA

INSPECTION RESULT

APPROVED	CHECKED	PREPARED			
Chaidir	Jefri	E. Musadad	No. Doc.	:	FM-QC-003
			Date Created	:	15/05/25
			Effective Date	:	20/05/25
			Rev. No	:	0

Customer	:	PT. DIID			
Part Name	:	Partition Plate (Sheet Metal)			
Part No	:	1P745271	Type	: SF 2	
Material	:	SGCD2-ZN22	Surf. Treatment	:	
No. lot	:		Qty Delv	:	
Status Part	:	☐ New Part (Sample	☐ Reguler Part		
		☐ Process Change	☐ Special Approval		
		☐ Initial Part For Masspro	☐		

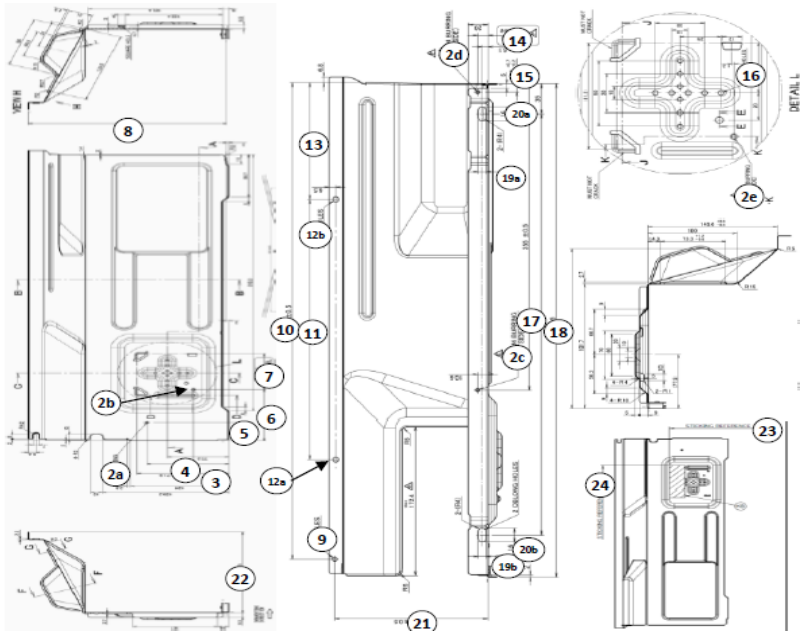

No.	Inspection Item	Standard Value		Inspection Instrument	DRC date :						DIID date :			
		Nominal	Tolerance		1	2	3	4	5	Judge	1	2	3	Judge
A. DIMENSION														
16	Hole	Ø 3,5	±0.15	Dig. Caliper										
		Ø 3,5	±0.15	Dig. Caliper										
		Ø 3,5	±0.15	Dig. Caliper										
		Ø 3,5	±0.15	Dig. Caliper										
		Ø 3,5	±0.15	Dig. Caliper										
		Ø 3,5	±0.15	Dig. Caliper										
17	Distance	486,5	±1.0	Faro Arm										
18	Distance	570,0	±0.5	Faro Arm										
19a	Distance	8,0	±0.5	Dig. Caliper										
19b	Distance	8,0	±0.5	Dig. Caliper										
20a	Distance	16,0	±0.5	Dig. Caliper										
20b	Distance	16,0	±0.5	Dig. Caliper										
21	Hole	155,1	±0.5	Faro Arm										
22	Distance	160,6	±0.5	Faro Arm										
23	Sticking Reference	0,0	± 2	Ruler										
24	Sticking Reference	0,0	± 2	Ruler										
B. APPEARANCE														
1	All Appearance	No Burr, No Dirty, No Oil, No Rust, No Dent, No Scratch, No Deform		Visual										

Note :