DRC

PT. DIAN RAYA CIPTA

CHECKSHEET INSPECTION RESULT

Approved	Checked	Prepared
Siswanta	Jefri	Dede R

No. Doc.	:	FM-QC-003
Date Created	:	12-06-24
Effective Date	:	12-06-24
Rev. No	:	0

Customer	:	PT. DIID	
Part Name	:	Shield Plate (Service Cover)	
Part No	:	3P580691-2	Type : BMS
Material	:	SGCC-Z18	Surf. Treatment :
No. lot	:		Qty Delv :
Status Part	:	☐ New Part (Sample	☐ Reguler Part
		☐ Process Change	☐ Special Approval
		☐ Initial Part For Masspro	☐ ……

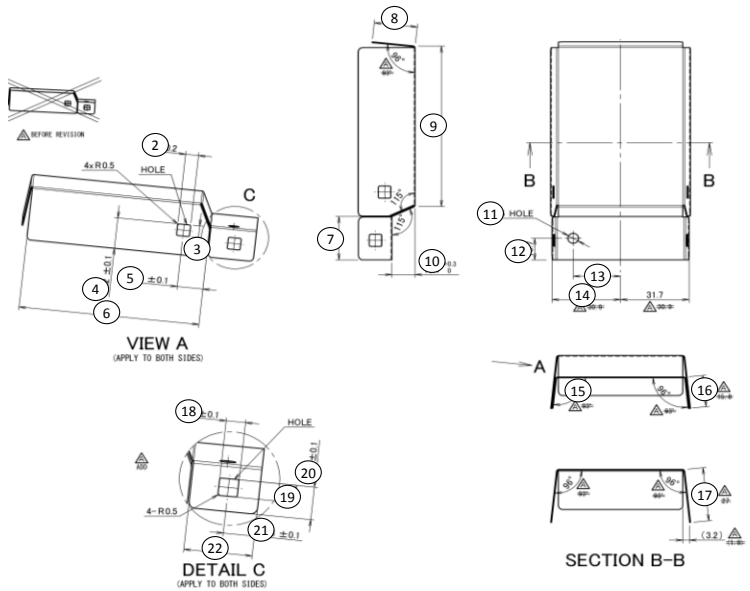

No.	Inspection Item	Standard Value		Inspection Instrument	DRC date :						DIID date :			
		Nominal	Tolerance		1	2	3	4	5	Judge	1	2	3	Judge
	A. DIMENSION													
1	Thickness	0.4	±0.04	Dig. Caliper										
2	Hole	6.0	±0.2	Dig. Caliper										
3	Hole	5.8	±0.15	Dig. Caliper										
4	Distance	15.2	±0.1	Heigh Gauge										
5	Distance	11.9	±0.1	Dig. Caliper										
6	Distance	83.6	±0.3	Dig. Caliper										
7	Distance	21.5	±0.3	Dig. Caliper										
8	Distance	20.0	±0.5	Dig. Caliper										
9	Distance	79.7	±0.5	Faro Arm										
10	Distance	10.7	+0.3/0	Heigh Gauge										
11	Hole	Ø5	±0.15	Dig. Caliper										
12	Distance	10.7	±0.5	Dig. Caliper										
13	Distance	21.9	±0.5	Heigh Gauge										
14	Distance	31.7	±0.5	Heigh Gauge										
15	Distance	96°	±2°	Bevel Protactor										
16	Distance	15.6	±0.5	Dig. Caliper										
17	Distance	26.5	±0.5	Dig. Caliper										
18	Hole	6.0	±0.1	Dig. Caliper										
19	Hole	5.8	±0.15	Dig. Caliper										
20	Distance	10.8	±0.1	Dig. Caliper										
21	Distance	9.6	±0.1	Dig. Caliper										
22	Distance	21.2	±0.3	Dig. Caliper										
	B. APPEARANCE													
1	All Appearance	No. Burr, No Dirty, No Oil, No Rust, No Dent, No Scratch, No Deform		Visual										

Note :

									OK		**NG**	**OK**	**NG**
	Revision	Date	Prepared		Checked		Approved		APPROVED	CHECKED	PREPARED	CHECKED	PREPARED
			Name	Sign	Name	Sign	Name	Sign					
									Jefri				