PT.DHARMA POLIMETAL
Dept. : PQE

QUALITY INSPECTION SHEET

SCANNED Digital Document

CUSTOMER : PT. ASTRA HONDA MOTOR	DRAW. REVISION : B	MODEL : K56(F)	
PART NAME : STAY, COMB SW	SEPPEN NO : M-16-F0134	QUANTITY : 5 Pcs	
PART NO. : 50111-K56 -N100-H1	REGISTRATION NO	SAMPLE NO :	

CATEGORI	☐	APPROVAL PART	☐	VERIFICATION PART	☐	OTHER	REMARK FOR OTHER CRITERIA	-	UNIT : mm

NO	CONTROL ITEM	TOLERANCE LOWER	TOLERANCE UPPER	INSPECTION METHOD / EQUIPMENT	SAMPLE 1	2	3	4	5	JUDGE	REMARKS
1	22,5	- 0.5	+ 0.5	H. Gauge							
2	24	-0.5	+ 0.5	H. Gauge							
(3)	27,3	- 0.1	+ 0.1	H. Gauge							
4	14,8	-0.5	+ 0.5	H. Gauge							
(5)	0,8	- 0.1	+ 0.1	H. Gauge							
(6)	6,9	- 0.1	+ 0.1	H. Gauge							
7	3,2	-0.5	+ 0.5	H. Gauge							
8	7,5	-0.5	+ 0.5	H. Gauge							
(9)	17,6	- 0.1	+ 0.1	H. Gauge							
10	3,7	- 0.5	+ 0.5	H. Gauge							
11	37,7	- 0.7	+ 0.7	H. Gauge							
12	32	- 0.7	+ 0.7	H. Gauge							
13	5,7	- 0.5	+ 0.5	H. Gauge							
14	28	- 0.5	+ 0.5	H. Gauge							
(15)	12,9	- 0.5	0	H. Gauge							
16	9,7	- 0.5	+ 0.5	H. Gauge							
17	Ø11	0	+ 0.4	△ Caliper							
(18)	R24.3	0	+ 0.5	△ Radius Gauge							
19	Ø6.5	0	0.4	△ Caliper							
		0	0.4	△ Caliper							
		0	0.4	△ Caliper							
20	90°	- 3°	+ 3°	Bevel Protector							
21	1,3	- 0.5	+ 0.5	△ Caliper							
(22)	L = 10mm (2PLCS)	-		Mistar							
	Lebar Bead 5 mm (min)	-		Mistar							
(23)	STAY COMB SW Material Specification: Drawing : JSH440W or SAPH440 Simplification : SAPH440			Mill. Cert. / Lap. Report							
	t=4.0mm	-0.24	+0.24	Caliper							
(24)	Kondisi Permukaan : Tidak burry, karat, cacat, dan tidak ada kerusakan lainnya			Visual							

2/11/18

PT. DHARMA POLIMETAL ORIGINAL Data Management Together

Note :

	INSPECTED	CHECKED	APPROVED
DATE			
SIGN			
NAME			

0 = OK X = NG △ = TEMPORARY

	DATE	SIGN / NAME	No	REVISION	DATE	SIGN / NAME	RESULT
MADE BY		P. Mantauw	1	Rev. Inst. Measuring	16.10.18	PMA	OK
CHECKED		Muflih	2	Drawing Revision	26.10.18	MFL	NG
APPROVED		Daniel P				DPW	

THIS DRAWING CONTAINS PROPRIETARY AND CONFIDENTIAL INFORMATION AND DATA EXCLUSIVELY OWNED BY PT. DHARMA POLIMETAL AND IS NOT TO BE COPIED REPRODUCED, OR OTHERWISE DISCLOSED TO OTHERS

Form Rev. 05 (07.02.2018)'by FT

REVISION RECORD

REV. LETTER	CHANGE NO.	DESCRIPTION	DATE	APPR.
A	-	First redraw based on M-16-F0134	21.08.18	IMA
B	-	Penambahan Dimensi	24.10.18	IMA

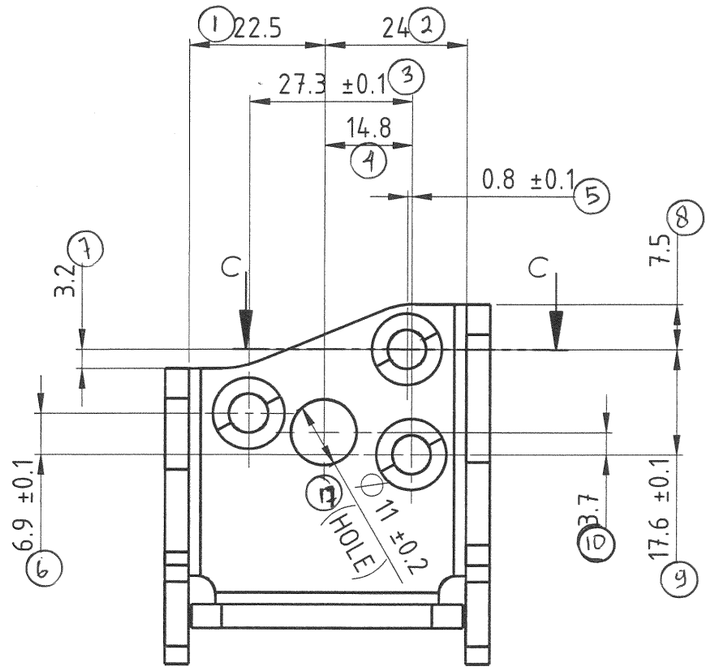

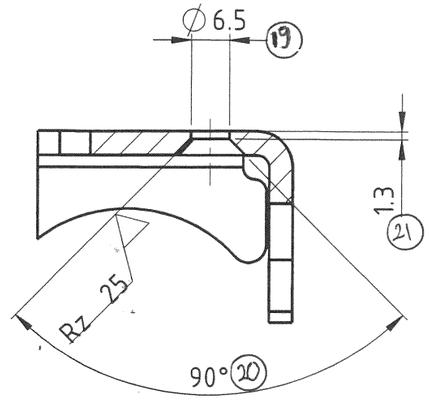

SECTION C-C

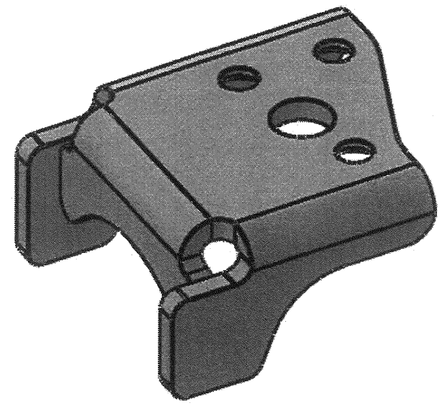

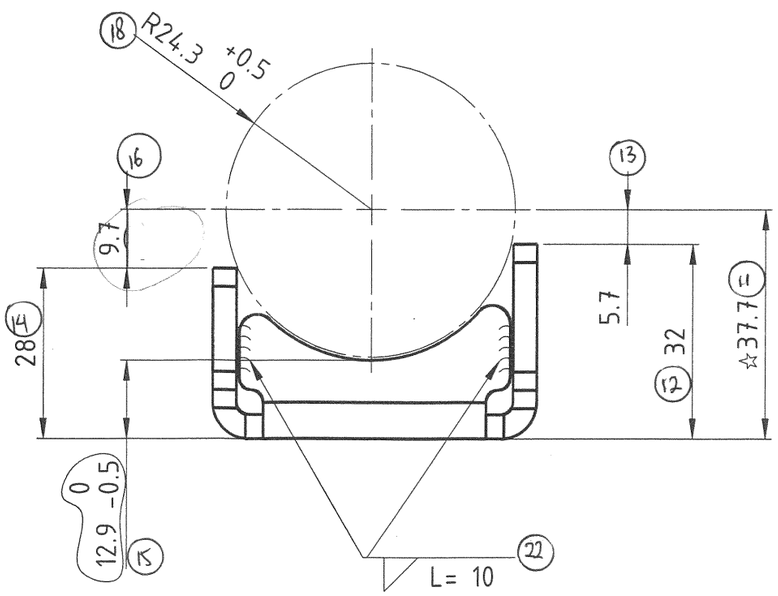

NOTE
1. THICKNESS : 4.0
2. THIS PART IS PERMANENT PART OF PIPE COMP, STRG HEAD.
3. NO BURRS OR SHARP EDGES ALLOWED ON EDGES.
4. ☆ MARKED DIMENSION SHOWS THAT AFTER WELDING TO PIPE COMP, STRG HEAD.

SCANNED Digital Document

ITEM No	PART No.	PART NAME	QTY.	MATERIAL	MATERIAL SIMPLIFICATION	Massa
1.1.2	50111-K56 -N100-H1	STAY, COMB SW	1	JSH440W OR SAPH440	SAPH, t4.0 (23)	0.130 kg

H — DATE 24.10.18
DRAWN. BY : IMA
AHM Q 0 — CHKD. BY: RUBI
APPD. BY.: SANDYA
DPM Q 0 — DEP. ENG. DANIEL
FINISH
NF — BREAK ALL SHARP EDGES

DIMENSION IN INCHES
FRACTIONS ± 1/32
.000 ± .005
.00 ± .015
.0 ± .030
ANGLES ± 1/2°
HOLE DIA + .004
- .002

DIMENSION IN METRIC
GENERAL ± JIS B 0405-M
ANGLES ± 1/2°
HOLE DIA + 0.10
- 0.05

DO NOT SCALE THIS DRAWING TOLERANCES
BREAK ALL SHARP EDGES FILLET .030 MAX
MACHINED SURFACES 125
UNLESS OTHERWISE SPECIFIED

PT. DHARMA POLIMETAL
JL. ANGSANA RAYA BLOK A9 No. 8, DELTA SILICON 1, CIKARANG

TITLE : STAY, COMB SW
PIPE COMP STRG HEAD (SOZAI)

ORIGINAL DWG : 5012G-K56 - N000-H1
CUSTOMER : PT. AHM
SIZE A3
DWG. No. 50111-K56 -N100-H1
REV. LETTER B
SCALE 1:1
SOLIDWORKS
Sheet 2 of 2

PROJECT K56F
DRAWING PROJECT
Printed 10/24/2018

File Name : P:\1. 2\MEARU\1. K56F\2. REDRAW\1. PIPE COMP. FRAME MAIN (SOZAI)\1.1 PIPE COMP. STRG HEAD (SOZAI)\1.1.2 STAY, COMB SW\2. REDRAW\50111-K56 -N100-H1_STAY, COMB SW