PT. DHARMA POLIMETAL

CHECK SHEET OF PART

DOC NO	: 00/CF-CS/HPM-3K6Y/ENG-4W/XII/2024
DOC DATE	: 20-Dec-24

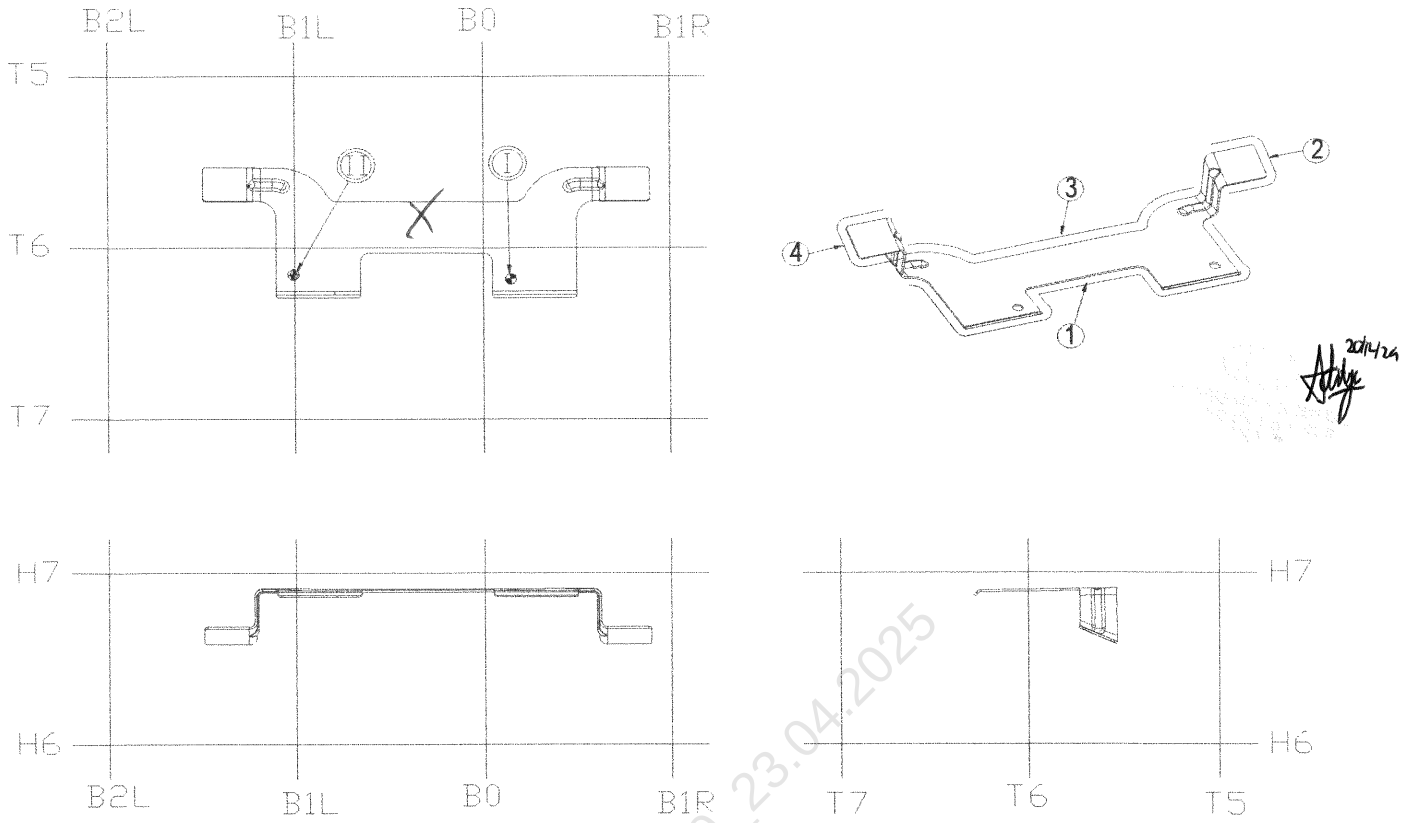

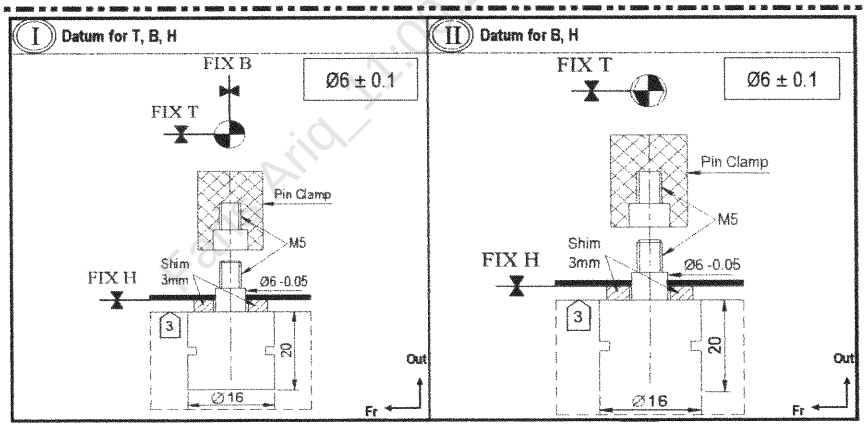

Description	No. of part to Checked					Total
	1	2	3	4	5	
No. of Point OK						
No. of point Measuring						
Acc. Pass Rate (%)						
Time of Checking	Day :		Date :			
Purpose For						

Note :

1. Accuracy Pass Rate (%) = $\frac{\text{Total no.of Point OK}}{\text{Total no.of Point Measuring}}$ X 100%
2. Lingkaran pada data yang keluar dari standard (Total cycle for out of standard data)

Revision Record	No	Date	Revision Record	Reference	Made	Sign
	1					
	2					
	3					
	4					
	5					

Approved	Foreman	Group Leader	Checked by :	PT. DHARMA POLIMETAL	Approved	Checked	Prepared
					Dadan B	Heri	Adityo

Model :	Part Name :	PT. HONDA PROSPECT MOTOR	Approved	Checked
3K6Y	BRKT, AUDIO UPR			
	Part No : 77183-3K6Y-T000-H1			

Form 019/ SOP-DP-ENG-09

DOC NO	: 00/CF-CS/HPM-3K6Y/ENG-4W/XII/2024	2 / 2
DOC DATE	: 20-Dec-24	

Sketch Point Measuring

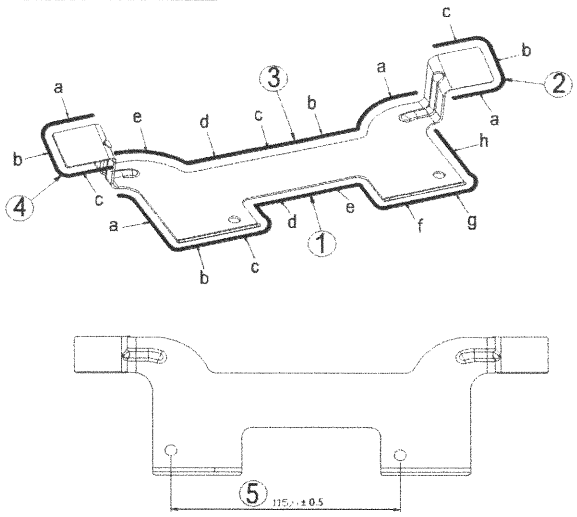

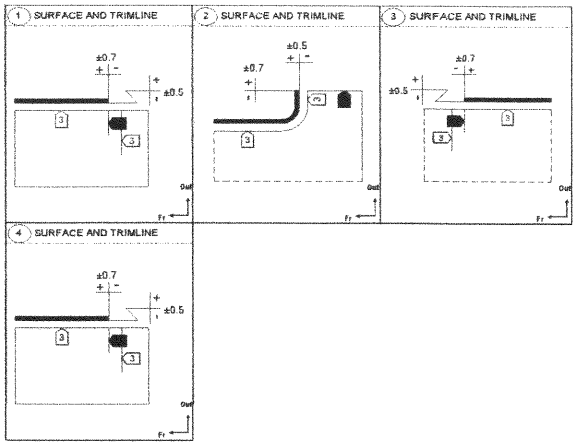

Measuring Point		Standard Value Nominal	Standard Value Tolerance	No.Of Part 1	2	3	4	5
(I) Datum for T, B, H		Ø6 ± 0.1						
(II) Datum for H, T		Ø6 ± 0.1						
(1) **Surface & Trimming line**								
Clearance	a	3	±0.5					
	b	3	±0.5					
	c	3	±0.5					
	d	3	±0.5					
	e	3	±0.5					
	f	3	±0.5					
	g	3	±0.5					
	h	3	±0.5					
Trimming	a	0	±0.7					
	b	0	±0.7					
	c	0	±0.7					
	d	0	±0.7					
	e	0	±0.7					
	f	0	±0.7					
	g	0	±0.7					
	h	0	±0.7					
(2) **Surface & Trimming line**								
Clearance	a	3	±0.5					
	b	3	±0.5					
	c	3	±0.5					
Trimming	a	0	±0.7					
	b	0	±0.7					
	c	0	±0.7					
(3) **Surface & Trimming line**								
Clearance	a	3	±0.5					
	b	3	±0.5					
	c	3	±0.5					
	d	3	±0.5					
	e	3	±0.5					
Trimming	a	0	±0.7					
	b	0	±0.7					
	c	0	±0.7					
	d	0	±0.7					
	e	0	±0.7					
(4) **Surface & Trimming line**								
Clearance	a	3	±0.5					
	b	3	±0.5					
	c	3	±0.5					
Trimming	a	0	±0.7					
	b	0	±0.7					
	c	0	±0.7					
(5) **Pitch Hole**		115.6 ± 0.5						
(6) **Thickness**		t: 1.2 ± 0.075						
(7) **Appearance**		No Crack, no Scratch, no Dimple, no Burry >0.3, others damage						
3K6Y		77183-3K6Y-T000-H1						

Measuring Point	Standard Value Nominal	Standard Value Tolerance	No.Of Part 1	2	3	4	5

Part Name :
BRKT, AUDIO UPR

Paris Arid_11.00.29_23.04.2025