PT. DHARMA POLIMETAL | CHECK SHEET OF PART

DOC NO : 01/CF-CS/HPM-3K6Y/ENG-4W/XII/2024
DOC DATE : 20-Dec-24
1/2

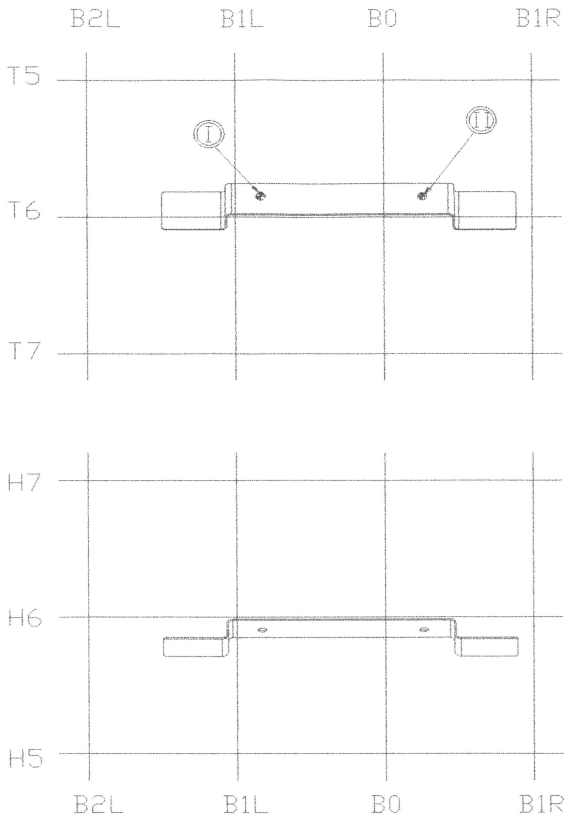

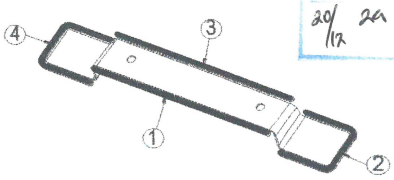

PT. DHARMA POLIMETAL ORIGINAL 20/12/24

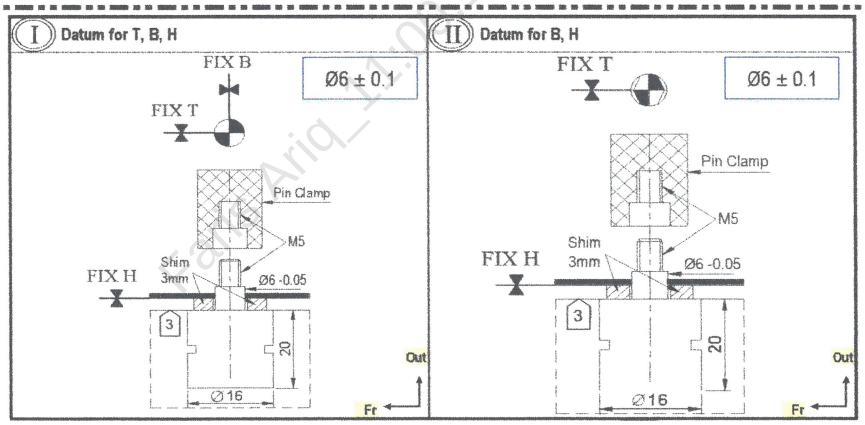

Description	No. of part to Checked					Total
	1	2	3	4	5	
No. of Point OK						
No. of point Measuring						
Acc. Pass Rate (%)						
Time of Checking	Day :			Date :		
Purpose For	Please Fill This Column					

Note :
1. Accuracy Pass Rate (%) = Total no.of Point OK / Total no.of Point Measuring X 100%
2. Lingkaran pada data yang keluar dari standard (Total cycle for out of standard data)

Revision Record	No	Date	Revision Record	Reference	Made	Sign
	1					
	2					
	3					
	4					
	5					

Approved	Foreman	Group Leader	Checked by :	PT. DHARMA POLIMETAL	Approved	Checked	Prepared
					Dadan B	Teo	Adit

Model :	Part Name :	PT. HONDA PROSPECT MOTOR	Approved	Checked
3K6Y	BRKT, AUDIO LWR			
	Part No : 77184-3K6Y-T000-H1			

Form 019/ SOP-DP-ENG-09

Sketch Point Measuring

DOC NO	: 01/CF-CS/HPM-3K6Y/ENG-4W/XII/2024	2 / 2
DOC DATE	: 20-Dec-24	

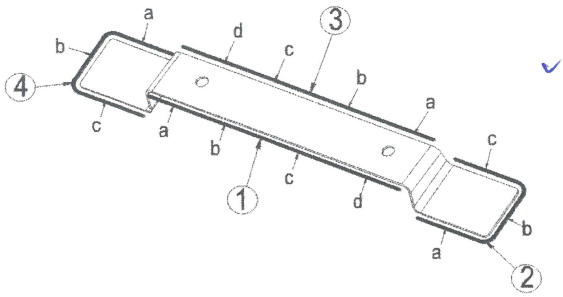

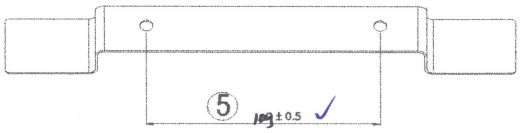

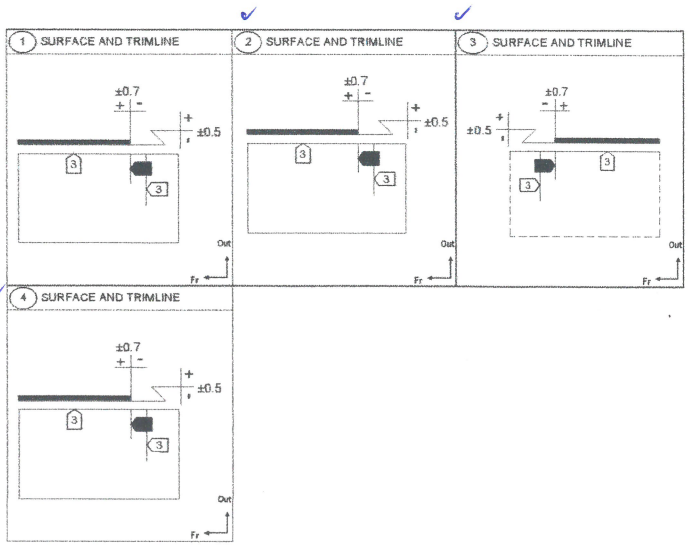

Measuring Point		Standard Value Nominal	Standard Value Tolerance	No.Of Part 1	2	3	4	5
(I) Datum for T, B, H		Ø6	± 0.1					
(II) Datum for H, T		Ø6	± 0.1					
(1) Surface & Trimming line								
Clearance	a	3	±0.5					
	b	3	±0.5					
	c	3	±0.5					
	d	3	±0.5					
Trimming	a	0	±0.7					
	b	0	±0.7					
	c	0	±0.7					
	d	0	±0.7					
(2) Surface & Trimming line								
Clearance	a	3	±0.5					
	b	3	±0.5					
	c	3	±0.5					
Trimming	a	0	±0.7					
	b	0	±0.7					
	c	0	±0.7					
(3) Surface & Trimming line								
Clearance	a	3	±0.5					
	b	3	±0.5					
	c	3	±0.5					
	d	3	±0.5					
Trimming	a	0	±0.7					
	b	0	±0.7					
	c	0	±0.7					
	d	0	±0.7					
(4) Surface & Trimming line								
Clearance	a	3	±0.5					
	b	3	±0.5					
	c	3	±0.5					
Trimming	a	0	±0.7					
	b	0	±0.7					
	c	0	±0.7					
(5) Pitch Hole		109	± 0.5					
(6) Thickness		t: 1.2	± 0.075					
(7) Appearance		No Crack, no Scratch, no Dimple, no Burry >0.3, others damage						
3K6Y		77184-3K6Y-T000-H1						

Measuring Point	Standard Value Nominal	Standard Value Tolerance	No.Of Part 1	2	3	4	5

Part Name :
BRKT, AUDIO LWR

Faris Ariq_11:00:16_23.04.2025