PT. DHARMA POLIMETAL | CHECK SHEET OF PART

DOC NO : 02/CF-CS/HPM-3K6Y/ENG-4W/XII/2024
DOC DATE : 20-Dec-24
1/2

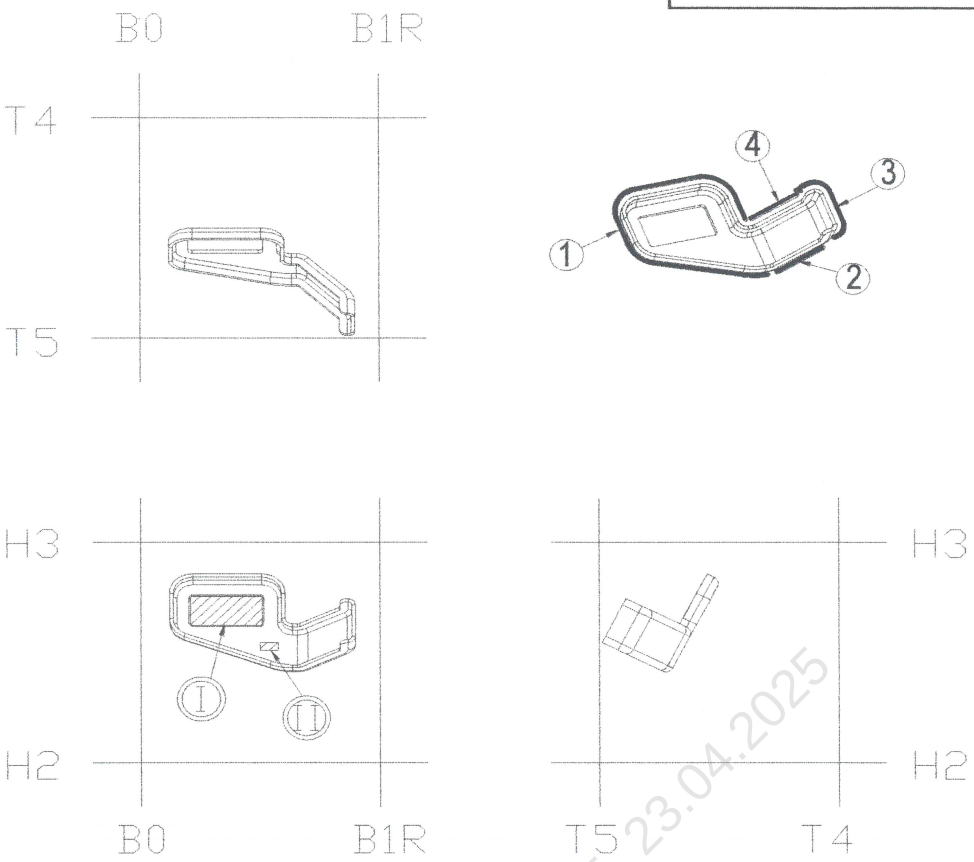

PT. DHARMA POLIMETAL ORIGINAL Eng. Data Management registered Valid if stamp is green 26/12/24

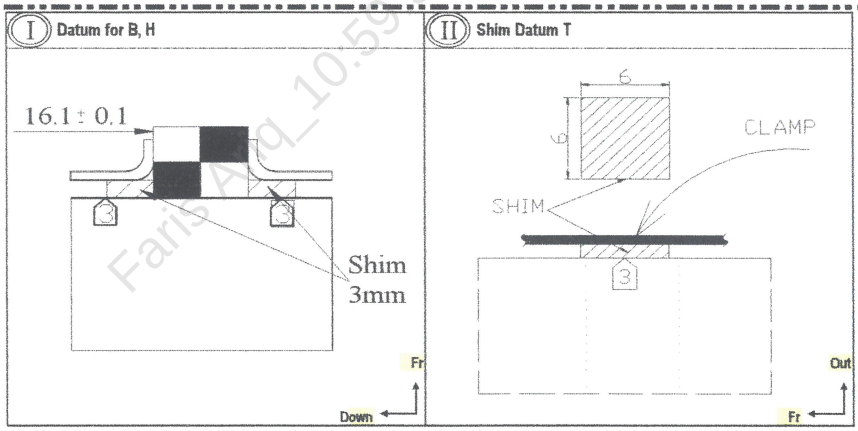

Faris Arq_10.59.55_23.04.2025

Description	No. of part to Checked					Total
	1	2	3	4	5	
No. of Point OK						
No. of point Measuring						
Acc. Pass Rate (%)						
Time of Checking	Day :			Date :		
Purpose For	Please Fill This Column					

Note :
1. Accuracy Pass Rate (%) = (Total no.of Point OK / Total no.of Point Measuring) X 100%
2. Lingkaran pada data yang keluar dari standard (Total cycle for out of standard data)

Revision Record

No	Date	Revision Record	Reference	Made	Sign
1					
2					
3					
4					
5					

Approved	Foreman	Group Leader	Checked by :	PT. DHARMA POLIMETAL	Approved	Checked	Prepared
					Dadan B	Teo 24/12	Adit 23/12/24

Model :	Part Name :	PT. HONDA PROSPECT MOTOR	Approved	Checked
3K6Y	BRKT, WCU			
	Part No : 77185-3K6Y-T000-H1			

Form 019/ SOP-DP-ENG-09

Sketch Point Measuring

DOC NO	:	02/CF-CS/HPM-3K6Y/ENG-4W/XII/2024	2 / 2
DOC DATE	:	20-Dec-24	

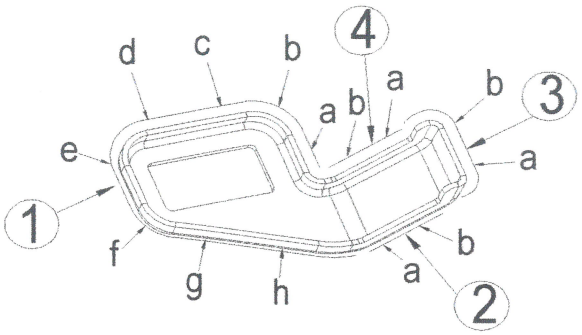

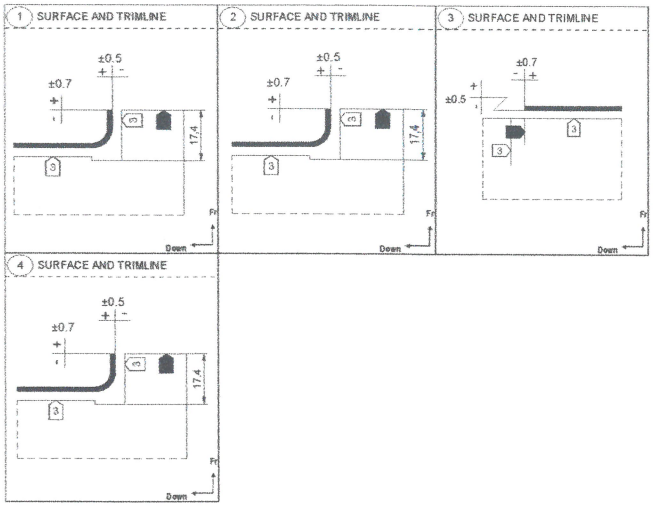

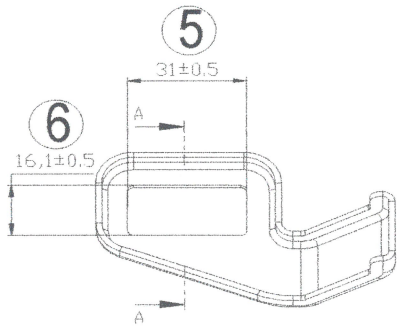

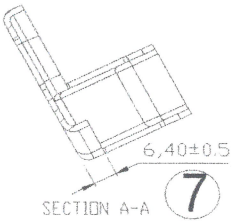

Measuring Point		Standard Value Nominal	Standard Value Tolerance	No.Of Part 1	2	3	4	5
(I) Datum for T, B, H		16,1	± 0.1					
(1) Surface & Trimming line								
Clearance	a	3	±0.5					
	b	3	±0.5					
	c	3	±0.5					
	d	3	±0.5					
	e	3	±0.5					
	f	3	±0.5					
	g	3	±0.5					
	h	3	±0.5					
Trimming	a	0	±0.7					
	b	0	±0.7					
	c	0	±0.7					
	d	0	±0.7					
	e	0	±0.7					
	f	0	±0.7					
	g	0	±0.7					
	h	0	±0.7					
(2) Surface & Trimming line								
Clearance	a	3	±0.5					
	b	3	±0.5					
Trimming	a	0	±0.7					
	b	0	±0.7					
(3) Surface & Trimming line								
Clearance	a	3	±0.5					
	b	3	±0.5					
Trimming	a	0	±0.7					
	b	0	±0.7					
(4) Surface & Trimming line								
Clearance	a	3	±0.5					
	b	3	±0.5					
Trimming	a	0	±0.7					
	b	0	±0.7					
(5) Slot Dimention		31	± 0.5					
(6) Slot Dimention		16.1	± 0.5					
(7) Bending High		6.4	± 0.5					
3K6Y		77185-3K6Y-T000-H1						

Measuring Point	Standard Value Nominal	Standard Value Tolerance	No.Of Part 1	2	3	4	5
(8) Thickness	t: 1.6± 0.07						
(9) Appearance	No Crack, no Scratch, no Dimple, no Burry >0.3, others damage						

Part Name :
BRKT, WCU

Faris Ariq_10:59:55_23.04.2025