PT. DHARMA POLIMETAL

CHECK SHEET OF PART

DOC NO : 01/CF-CS/SIM-Y4L/ENG-4W/X/2017

DOC DATE : 07 November 2017

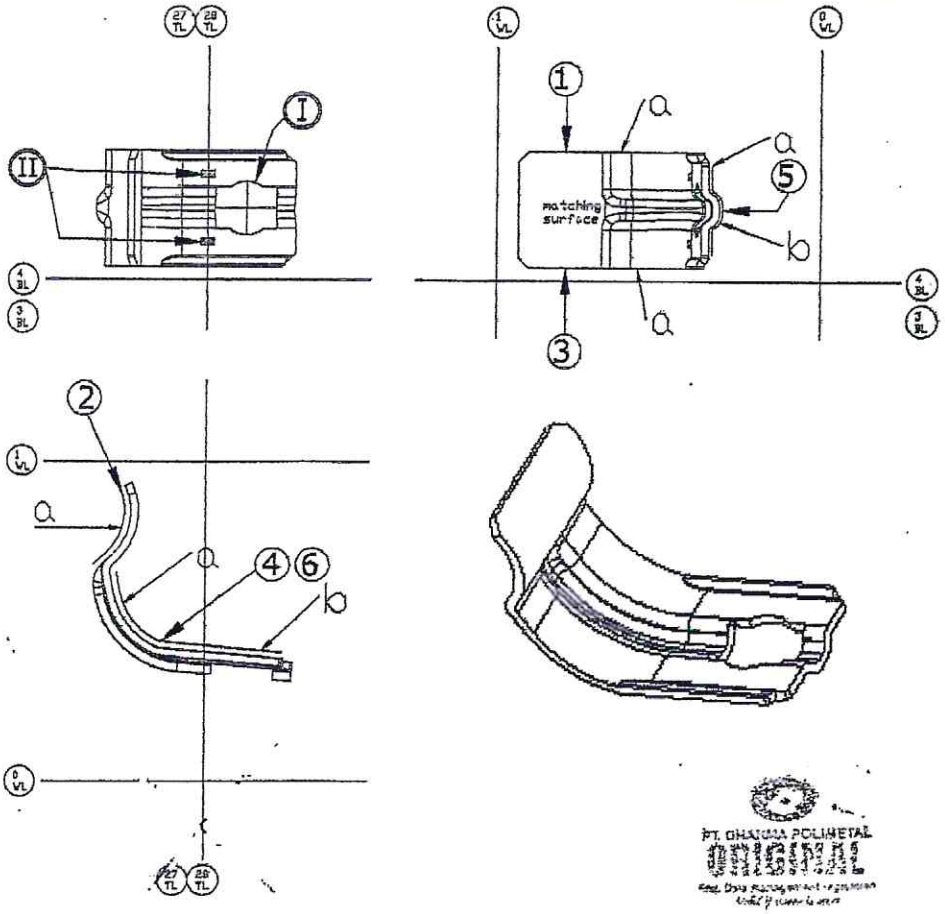

PT. DHARMA POLIMETAL

DATUM OF MEASURING

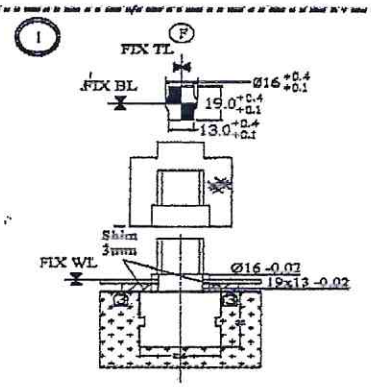

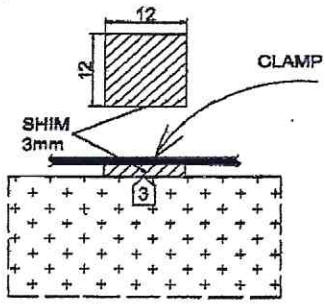

Description	No. of part to Checked					Total
	1	2	3	4	5	
No. of Point OK						
No. of point Measuring						
Acc. Pass Rate (%)						
Time of Checking	Day			Date		
Purpose For						

Note :

1. Accuracy Pass Rate (%) = Total no.of Point OK / Total no.of Point Measuring X 100%

2. Lingkaran pada data yang keluar dari standard (Total cycle for out of standard data)

Revision Record	No	Date	Revision Record	Reference	Made	Sign
	1					
	2					
	3					
	4					
	5					

Approved	Foreman	Group Leader	Checked by :	PT. DHARMA POLIMETAL	Approved	Checked	Prepared
					Dadan B	Sigit W.P.	Franciska

Model :	Part Name :	PT SUZUKI INDOMOBIL MOTOR	Approved	Checked
Y4L	BRKT RR BRAKE FLEXIBLE HOSE Part No : 59783-52S00	SUZUKI		

PT. DHARMA POLIMETAL

CHECK SHEET OF PART

DOC NO : 01/CF-CS/SIM-Y4L/ENG-4W/X/2017

DOC DATE : 07 November 2017

2 / 2

Detail Of Measuring Point	Measuring Item & Point Standard		No.Of Part 1	2	3	Judgement
(I) Round Hole Datum Diameter	Ø16.5 X 19 $^{+0.4}_{+0.1}$					
1 Surface for ... 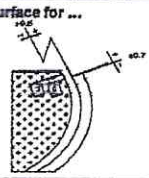	Clearance					
	3 ±0.5	a				
	Trimming					
	0 ±0.7	a				
2 Surface for ... 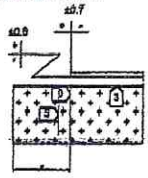	Clearance					
	3 ±0.5	a				
	Trimming					
	0 ±0.7	a				
3 Surface for ... 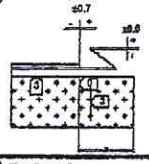	Clearance					
	3 ±0.5	a				
	Trimming					
	0 ±0.7	a				
4 Surface for ... 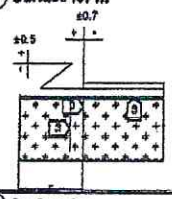	Clearance					
	3 ±0.5	a				
		b				
	Trimming					
	0 ±0.7	a				
		b				
5 Surface for ... 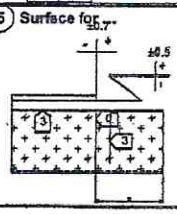	Clearance					
	3 ±0.5	a				
		b				
	Trimming					
	0 ±0.7	a				
		b				

Detail Of Measuring Point	Measuring Item & Point Standard		No.Of Part 1	2	3	Judgement
6 Surface for ... 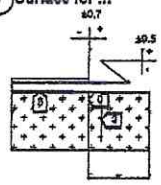	Clearance					
	3 ±0.5	a				
		b				
	Trimming					
	0 ±0.7	a				
		b				
7 Appearance	No Harmful Burs, No Crack, Scratch, No Rust & Other Damage					

Model :	Part No :		Part Name :
Y4L	59783-52S00		BRKT RR BRAKE FLEXIBLE HOSE