PT. DIAN RAYA CIPTA
Metal Stamping, Welding, Machining & Dies

INSPECTION STANDARD/DATA

(1/2)

MODEL	Part No	Part Name	Clasification
BWP	BWP-H3519-00	BRK METER	Priority: A B C

Issued date: 10/21/2024

Inspection Purpose

- ☐ New Model
- ☐ Revisi, try Out, Mass Prod
- ☐ No ( )
- ☐ Change Process
- ☐ Ins. Process
- ☐ Daily

Sketch :

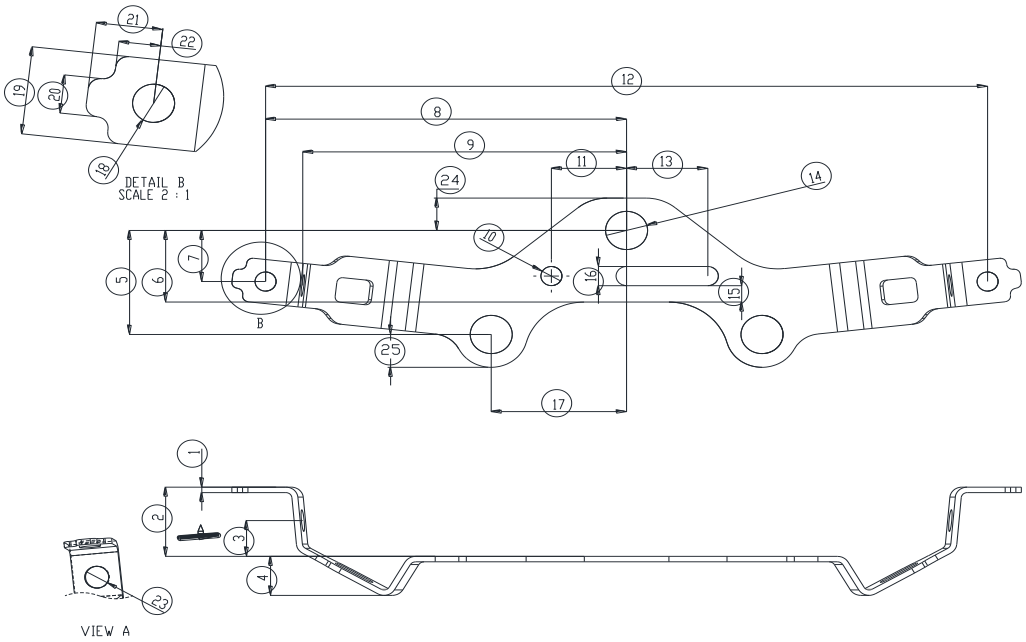

Spec Mat.	YSH270C-P t2.0
Heat & Surface Treatment	-
Identification Mark	-
Lot. No.	-

Note : Unless otherwise specified. Corner radius

Critical Point	No	Inspection Item	Standard	Instrument	Qty Insp New	Qty Insp Reg	1	2	3	4	5	Remark
	1	Thickness	2.0 ± 0.15	Dig. Caliper	5 pcs/ Delv	5 pcs/ Month						
	2	Width	2-25.3 ± 0.25	Heigh Gauge	5 pcs/ Delv	5 pcs/ Month						
	3	Distance	2-13 ± 0.5	Heigh Gauge	5 pcs/ Delv	5 pcs/ Month						
	4	Distance	2-14.3 ± 0.5	Heigh Gauge	5 pcs/ Delv	5 pcs/ Month						
	5	Distance	2-38 ± 0.3	Heigh Gauge	5 pcs/ Delv	5 pcs/ Month						
	6	Diameter	26.2 ± 0.5	Heigh Gauge	5 pcs/ Delv	5 pcs/ Month						
	7	Distance	2-18.7 + 0.25	Heigh Gauge	5 pcs/ Delv	5 pcs/ Month						
	8	Distance	2-120 ± 0.2	Faro Arm	5 pcs/ Delv	5 pcs/ Month						
	9	Distance	2-107.6 ± 1.0	Faro Arm	5 pcs/ Delv	5 pcs/ Month						
	10	Diameter	Ø7 + 0.2 - 0.0	Dig. Caliper	5 pcs/ Delv	5 pcs/ Month						

Approval	Code	Date	Revision No	Scale Priority	PIC Supplier	Yamaha Approval
	△					
	△					
	△					
	△					
	△					
	△					

Result

Issued By Month: /Date: /Year:

JUDGEMENT OK *or* NG

Quantity Delivery pcs

Head Section | Operator

Inspection Facility | IDEA | Visual | Insp. JIG | Machine | Measure

Plan Make To / /

Remarks :
* Child Part For BRACKET METER BWP-H3519-00

Approval

PT MITSUBA INDONESIA PIPE PARTS			PT DIAN RAYA CIPTA		
Approve By	Reviewed By	Checked By	Approve By	Checked By	Prepared By
			Siswanta	Jefri	Dede R

DRC	PT. DIAN RAYA CIPTA	INSPECTION STANDARD/DATA	(2/2)

MODEL	BWP	Part No	B W P - H 3 5 1 9 - 0 0	Part Name	BRK METER	Clasification			
						Priority	A	B	C

Critical Point	No	Inspection Item	Standard	Instrument	Qty Insp New	Qty Insp Reg	1	2	3	4	5	Remark
	11	Distance	25.0 ± 0.50	Faro Arm	5 pcs/ Delv	5 pcs/ Month						
	12	Distance	240.0 ± 0.4	Faro Arm	5 pcs/ Delv	5 pcs/ Month						
	13	Distance	27.0 ± 0.5	Faro Arm	5 pcs/ Delv	5 pcs/ Month						
	14	Diameter	3-Ø14 + 0.2 - 0.0	Dig. Caliper	5 pcs/ Delv	5 pcs/ Month						
	15	Distance	6.0 ± 0.5	Dig. Caliper	5 pcs/ Delv	5 pcs/ Month						
	16	Diameter	7 + 0.2 - 0.0	Dig. Caliper	5 pcs/ Delv	5 pcs/ Month						
	17	Distance	2-45 + 0.3	Faro Arm	5 pcs/ Delv	5 pcs/ Month						
	18	Distance	2-Ø7 + 0.2 - 0.0	Dig. Caliper	5 pcs/ Delv	5 pcs/ Month						
	19	Distance	2-16 ± 0.5	Dig. Caliper	5 pcs/ Delv	5 pcs/ Month						
	20	Distance	2-7 ± 0.2	Dig. Caliper	5 pcs/ Delv	5 pcs/ Month						
	21	Distance	2-11 ± 0.15	Heigh Gauge	5 pcs/ Delv	5 pcs/ Month						
	22	Distance	2-7 ± 0.2	Heigh Gauge	5 pcs/ Delv	5 pcs/ Month						
	23	Diameter	2-Ø8 + 0.2 - 0.0	Dig. Caliper	5 pcs/ Delv	5 pcs/ Month						
	24	Distance	11.8 ± 0.5	Dig. Caliper	5 pcs/ Delv	5 pcs/ Month						
	25	Distance	12.0 ± 0.5	Dig. Caliper	5 pcs/ Delv	5 pcs/ Month						
	26	Check by insp JIG (All Shape)	Masuk Lancar (Enter Smoothly)	Insp. Jig	5 pcs/ Delv	5 pcs/ Month						
	27	Appearance	No Sharp Burrs, No Defect, No Sharp Edged, etc.	Visual	100%	100%						