PT. DIAN RAYA CIPTA	CHECKSHEET INSPECTION RESULT	PT. MIPP		PT. DIAN RAYA CIPTA			Hal	:	1/1
		Approved	Checked	Approved	Checked	Prepared	No. Doc.	:	FM-QC-003
							Date Created	:	23-02-26
							Effective Date	:	23-02-26
				CHAIDIR	JEFRI	ENDANG	Rev. No	:	0

Customer	: PT. MITSUBA INDONESIA PIPE PART		
Part Name	: BRACKET REAR CUSHION 2		
Part No	: BWL-F1382-00	Type / Model	: BWL
Material	: YSH590R-P t4.0	Surf. Treatment	:
No. lot	:	Qty Delv	:
Status Part	: ☐ New Part (Sample	☐ Reguler Part	
	☐ Process Change	☐ Special Approval	
	☐ Initial Part For Masspro	☐ ……	

SKETCH :

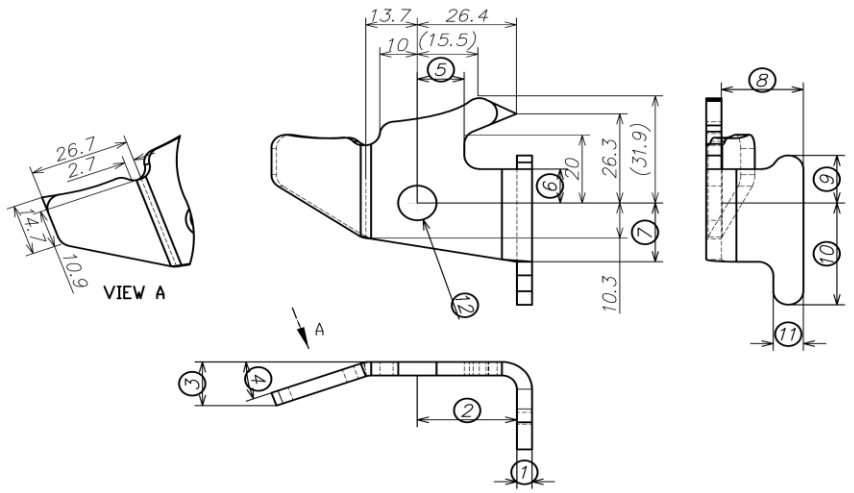

No.	Inspection Item	Standard Value		Inspection Instrument	DRC date :						MIPP date :			
		Nominal	Tolerance		1	2	3	4	5	Judge	1	2	3	Judge
A. DIMENSION														
1	Thickness	4,0	±0.24	Digital Caliper										
2	Distance	26,5	±0.5	Height Gauge										
3	Distance	12,9	±0.5	Height Gauge										
4	Angel	20°	±1	Bevel Protactor										
5	Distance	12,5	±0.5	Height Gauge										
6	Distance	10,0	±0.5	Height Gauge										
7	Distance	17,3	±0.5	Height Gauge										
8	Distance	(21.8)	±1	Height Gauge										
9	Distance	14,0	±0.5	Height Gauge										
10	Distance	30,0	±0.5	Height Gauge										
11	Distance	8,0	±0.5	Height Gauge										
12	Diameter	10,2	+0.2 +0.05	Digital Caliper										
B. APPEARANCE														
1	Burry	maximal 0.3		Visual										
2	Scratch / Baret	Tidak Teraba kuku		Visual										
3	Crack / Retak	Tidak ada		Visual										
4	Karat	Tidak ada		Visual										
5	NG visual lain	Tidak ada		Visual										

Note :

									OK		NG	OK	NG
	Revision	Date	Prepared		Checked		Approved		APPROVED	CHECKED	PREPARED	CHECKED	PREPARED
			Name	Sign	Name	Sign	Name	Sign					
0	Penerbitan Awal	23-02-26	Endang M		Jefri		Chaidir						