PT. DIAN RAYA CIPTA	CHECKSHEET INSPECTION RESULT	PT. MIPP		PT. DIAN RAYA CIPTA			Hal	:	1/1
		Approved	Checked	Approved	Checked	Prepared	No. Doc.	:	FM-QC-003
							Date Created	:	30-01-26
							Effective Date	:	30-01-26
				CHAIDIR	JEFRI	ENDANG	Rev. No	:	0

Customer	:	PT. MITSUBA INDONESIA PIPE PART	
Part Name	:	BRKT 10	
Part No	:	BWL-F139M-00	Type / Model : BWL
Material	:	YSH590R-P t1.6	Surf. Treatment :
No. lot	:		Qty Delv :
Status Part	:	☐ New Part (Sample	☐ Reguler Part
		☐ Process Change	☐ Special Approval
		☐ Initial Part For Masspro	☐ ……

SKETCH :

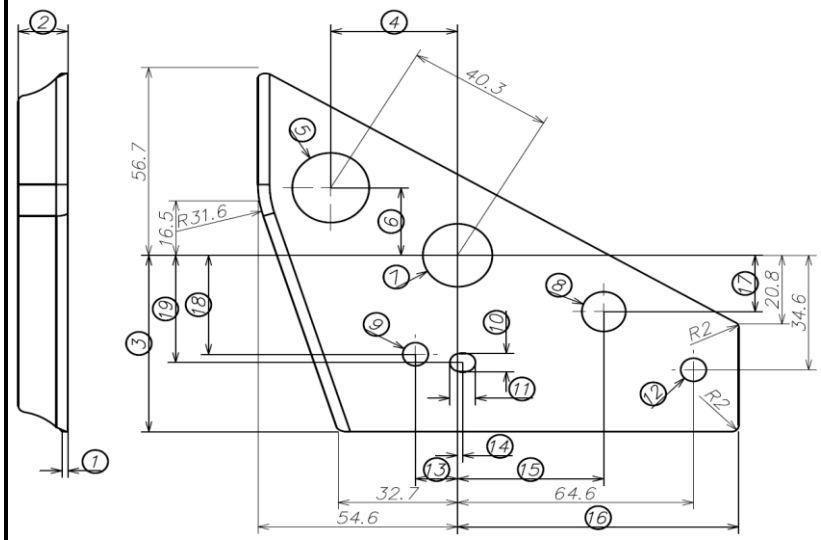

No.	Inspection Item	Standard Value		Inspection Instrument	DRC date :						MIPP date :			
		Nominal	Tolerance		1	2	3	4	5	Judge	1	2	3	Judge
A. DIMENSION														
1	Thickness	1,6	±0.18	Digital Caliper										
2	Distance	13,6	±0.5	Height Gauge										
3	Distance	53,2	±0.7	Height Gauge										
4	Distance	34,7	±0.7	Height Gauge										
5	Diameter	Ø21	±0.5	Digital Caliper										
6	Distance	20,4	±0.5	Height Gauge										
7	Diameter	Ø19	±0.5	Digital Caliper										
8	Diameter	Ø12	+0.5 0	Digital Caliper										
9	Diameter	Ø7	+0.2 0	Digital Caliper										
10	Hole Oval	5,5	+0.5 0	Digital Caliper										
11	Hole Oval	7,0	+0.5 0	Digital Caliper										
12	Diameter	Ø7	+0.2 0	Digital Caliper										
13	Distance	11,5	±0.5	Height Gauge										
14	Distance	1,4	±0.5	Height Gauge										
15	Distance	40,0	±0.7	Height Gauge										
16	Distance	77,0	±0.7	Height Gauge										
17	Distance	17,0	±0.5	Height Gauge										
18	Distance	29,9	±0.5	Height Gauge										
19	Distance	32,4	±0.7	Height Gauge										
B. APPEARANCE														
1	Burry	maximal 0.3		Visual										
2	Scratch / Baret	Tidak Teraba kuku		Visual										
3	Crack / Retak	Tidak ada		Visual										
4	Karat	Tidak ada		Visual										
5	NG visual lain	Tidak ada		Visual										

Note :

									OK		NG	OK	NG
	Revision	Date	Prepared		Checked		Approved		APPROVED	CHECKED	PREPARED	CHECKED	PREPARED
			Name	Sign	Name	Sign	Name	Sign					
0	Penerbitan Awal	30-01-26	Endang M		Jefri		Chaidir						